truflo®

PADDLE WHEEL FLOW TRANSMITTER

Industry's Most Accurate Paddle Wheel Flow Transmitter

All Plastic Construction

FEATURES

- **EXCELLENT CHEMICAL RESISTANCE, PP, PVDF, PFA, CERAMIC**
- **SIZE RANGE ½" - 24"**
- **MEASURING FLOW RANGE (0.33 to 26 Ft/s)**
- **EASY TO INSTALL**
- **EXCELLENT FOR LOW or HIGH TEMPERATURES -25 to 90°C (-4 to 194°F)**
- **NEMA 4X (IP65) or NEMA 6 (IP68) RATINGS**
- **EXTRA LONG LASTING PFA PADDLE (ZIRCONIUM CERAMIC SHAFT & BEARINGS)**
- **EXCELLENT DOUBLE O-RING SEAL**
- **HIGH PRESSURE RATING (UP TO 200 PSI)**

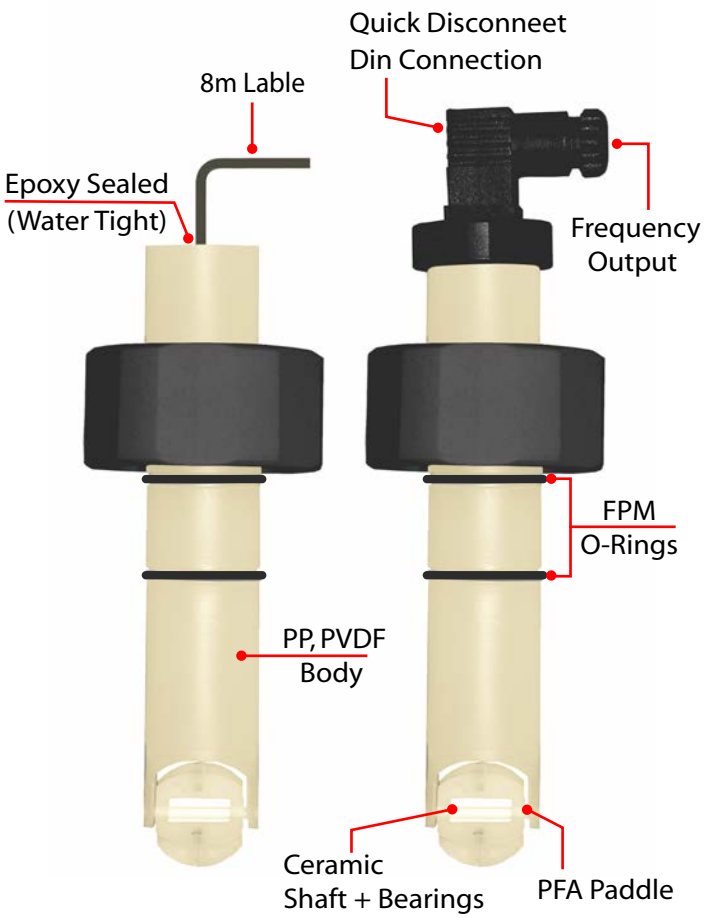

SPECIFICATION

Supply Voltage	DC 24V
Measuring Accuracy	±0.75% of Full Scale
Repeatability	±0.5% of Full Scale
Pipe size	0.5 to 4 inch (DN15 to DN100)(T0) 6 to 24 inch (DN150 to SN600)(T1)
Output Frequency	60.5Hz per m/s nominal, 18.45Hz per ft/s nominal
Sensor Body Material	PVDF, PP
Rotor Material	PFA (TEFLON®)
Shaft and Beasings Material	Zircoma Ceramic (ZrO2)
O-rings Materials	FKM (Viton)
Electrical Connection	DIN Mini-Connector 43650-A (IP65) Electrical cable (IP68)
Cable Type	3 conductor + Shield.26A WG.PVC
Reverse Voltage Protection	Included As Standard
Viscosity Range	0.5 to 20 Centi Stoke (cst)
Maximum Particle Size	<10% with Particle Size (<0.5mm cross section or length)
Maximum Operating Pressure/Temperature	PVDF body (200 psi @ -30 to 80°C, 36 psi @ 90°F) PP Body 180Psi -20to27°C 25Psi@80°C
Storage Condition	PP Body (-30to90°C) PVDF Body (-30to100°C)
CE EMC Certification	EN 55022:1998

RoHS

(Max Fluid Velocity should NOT EXCEED 8 ft/sec)

DC Power Only

truflo®

□ □ □ □

	Sensor Body Material		Sensor Length-Pipe Diameter		Electrical Connection/Protection Class		O-rings
P	PP Body	T0	(1/2"-4")	D	DIN mini-connection 43650-A/IP65	F	FKM(Viton)
V	Natural PVDF (-13 to 194°F)	T1	(6"-24)	E	Electrical cable 8M/IP68 (26 FT)		
				S	Electrical cable (customer) -IP68		

3. DIMENSION (unit : inch)

(LS - XXE)

Electrical Cable 8M (26 FT)

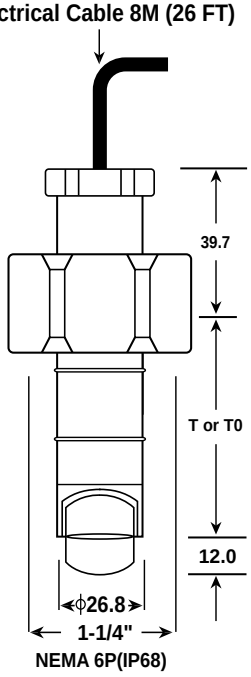

NEMA 6P(IP68)

T0=68.5 mm(2.70")

(LS - XXD)

DIN Connector

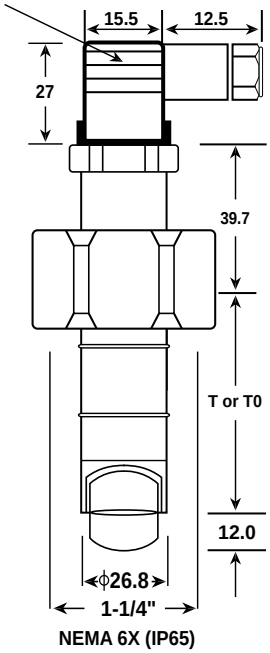

NEMA 6X (IP65)

T1=98.5mm(3.88")

4. TERMINAL CONNECTIONS

(LS-XXE)

3 Cond.+ Shield, 28AWG.PVC(105°C)

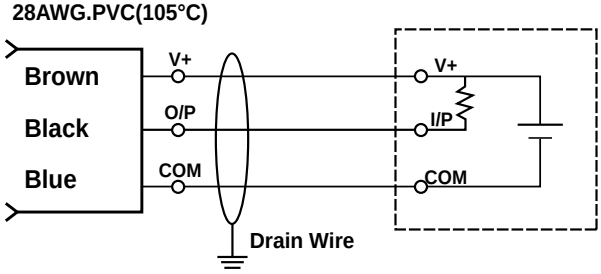

(LS-XXD)

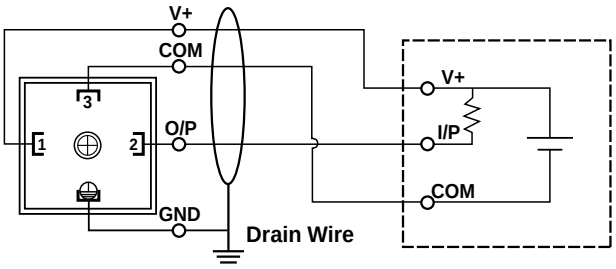

FLOW METER

(Max Fluid Velocity should NOT EXCEED 8 ft/sec)

DC Power Only

truflo®

"GO WITH FLOW"

FITTING FOR LS & LSS SERIES PADDLE WHEEL FLOW METERS

■ TEE FITTING (SCH80)

MODEL : TLFS - □ □□

	Type	No	Size	Sensor
A	PVC Tee fitting + ANSI 150 PSI Flange	10	1"	T
		12	1-1/4"	T
J	CPVC Tee fitting + ANSI 150 PSI Flange	15	1-1/2"	T
		20	2"	T
T	PVC Tee fitting Socket (Sch 80)	25	2-1/2"	T
		30	3"	T
N	CPVC Tee fitting Socket (Sch 80)	25	2-1/2"	T
		30	3"	T
● PVC / CPVC Tee fitting for ASTM SCH80 Pipes		40	4"	T

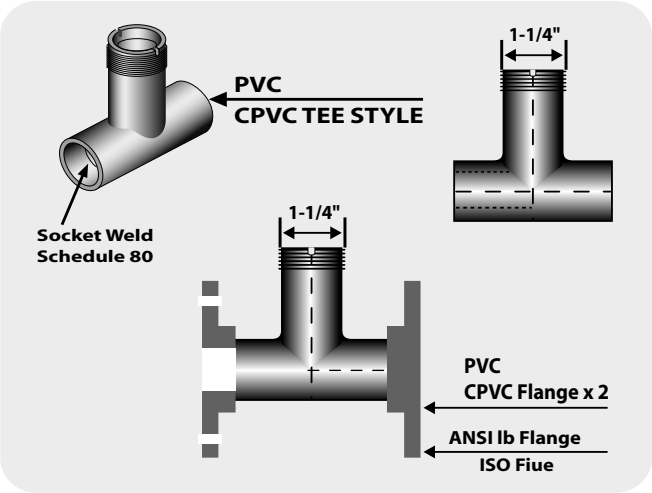

■ CPVC + PP CLAMP SADDLES (SCH80)

MODEL : LCLS - □ □□

	Type	No	Size	Sensor
A	CPVC + PP Clamp Saddles + ANSI 150PSI Flange (CPVC)	20	2"	T
		25	2-1/2"	T
C	CPVC + PP Clamp Saddles	30	3"	T
		40	4"	T
		80	8"	T1

- Note 1 : SUS304 Bolt and Nut for PP Clamp Saddles
- Note 2 : LCLS -A or C XX (Drilling hole = 40mm)

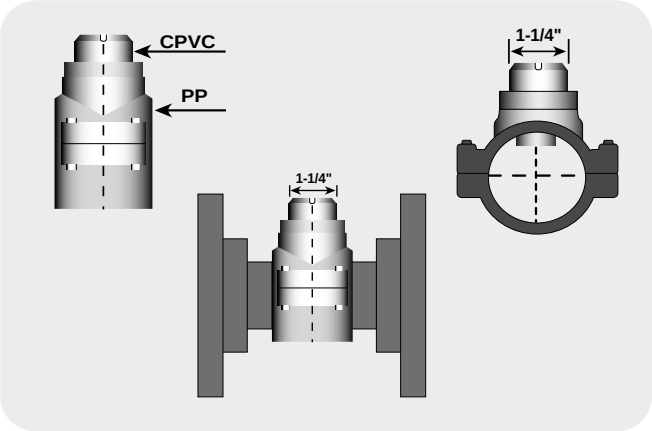

■ CPVC GLUE-ON ADAPTERS

MODEL : PLGS - □□

	PIPE Size (DN)	Sensor Length
GT	0.5" - 4" (15-100)	T
T1	6" - 24" (150-600)	T1

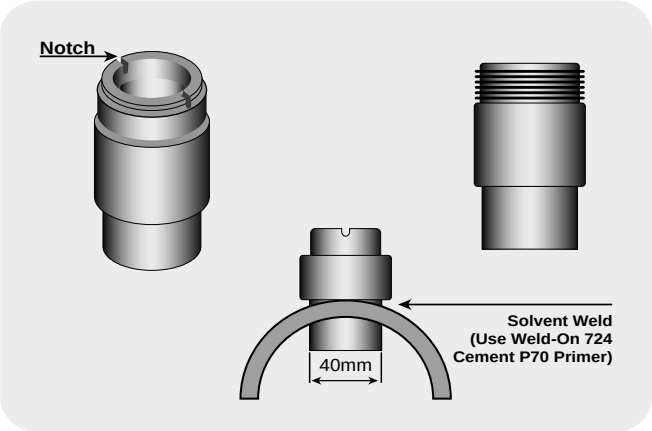

CPVC SOLVENT CEMENT - WELDON 724 + P70 Primer

(Max Fluid Velocity should NOT EXCEED 8 ft/sec)

DC Power Only